BPOWER YB9L-B

9Ah 115A

BPOWER CLASSIC series batteries are classic batteries made with the utmost care. To maintain factory freshness of batteries they are available in a dry version with an electrolyte attached. The launch takes place shortly before installing the battery. Filled with electrolyte the battery becomes ready for use. Periodically you should check the electrolyte level because CLASSIC batteries are not completely structurally sound tight.

BASIC PARAMETERS		TECHNOLOGY	
Nominal voltage (V)	12	Technology	CA/CA
Nominal capacity C10 (Ah)	9	Separator	Envelope
Cold cranking amperage	115		
PHYSICAL PARAMETERS		**CHARGING PARAMETERS (25°C)**	
Dimensions (L x W x H)	135 x 75 x 139 mm	Charging voltage	14,0V - 14,4V
Weight (kg)	3,12	Recommended max. charging current	0.9A
Terminal type	6		

Terminal type

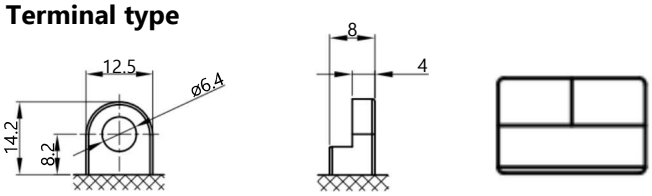

Front view Side view Top view

Cell layout

0

Dimensions

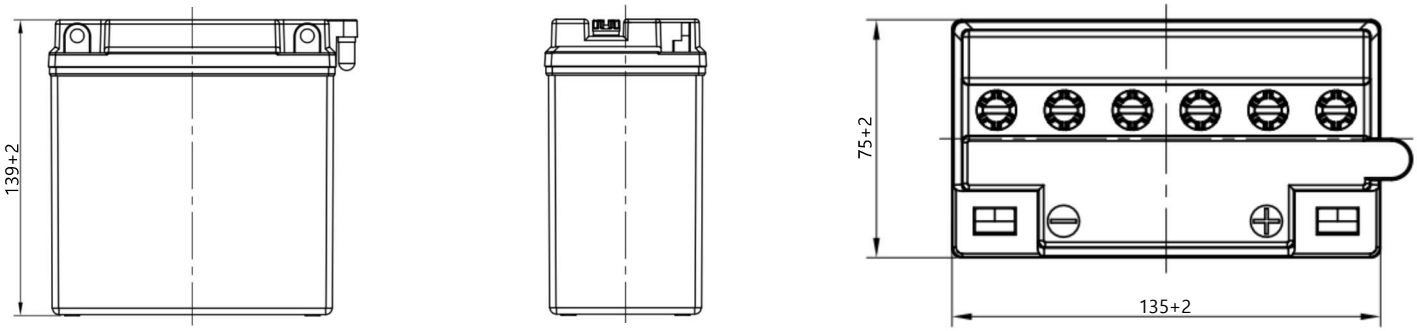

Headquarters in Warsaw
Jana Kazimierza 61
01-267 Warszawa

Branch in Gdansk
Twarda 12
80-871 Gdańsk

+48 22 877 54 96
biuro@baterie.com.pl
www.baterie.com.pl

BATERIE PRZEMYSŁOWE

The date of issue of catalog card: 02/2024